MEMORY DEVICE

Md Shafiuzzaman

Lecturer

Dept. of CSE, NBIU.

KEY CHARACTERISTICS OF COMPUTER MEMORY SYSTEMS

Location
- Internal (e.g., processor registers, cache, main memory)
- External (e.g., optical disks, magnetic disks, tapes)

Capacity
- Number of words
- Number of bytes

Unit of Transfer
- Word
- Block

Access Method
- Sequential
- Direct
- Random
- Associative

Performance
- Access time
- Cycle time
- Transfer rate

Physical Type
- Semiconductor
- Magnetic
- Optical
- Magneto-optical

Physical Characteristics
- Volatile/nonvolatile
- Erasable/nonerasable

Organization
- Memory modules

From a user's point of view, the two most important characteristics of memory are capacity and performance. Three performance parameters are used:

■ **Access time (latency):** This is the time it takes to perform a read or write operation, that is, the time from an address is presented to the memory to the data have been stored or made available for use. For non- random- access memory, access time is the time it takes to position the read–write mechanism at the desired location.

■ **Memory cycle time:** This concept is primarily applied to random-access memory and consists of the access time plus any additional time required before a second access can commence. This additional time may be required for transients to die out on signal lines or to regenerate data if they are read destructively. Note that memory cycle time is concerned with the system bus, not the processor.

■ **Transfer rate:** This is the rate at which data can be transferred into or out of a memory unit. For random-access memory, it is equal to 1/(cycle time). For non-random-access memory, the following relationship holds:

$$T_n = T_A + \frac{n}{R}$$

Tn = Average time to read or write n bits

TA = Average access time

n = Number of bits

R = Transfer rate, in bits per second (bps)

THE MEMORY HIERARCHY

A variety of technologies are used to implement memory systems, and across this spectrum of technologies, the following relationships hold:

- Faster access time, greater cost per bit;
- Greater capacity, smaller cost per bit;
- Greater capacity, slower access time.

THE MEMORY HIERARCHY

As one goes down the hierarchy, the following occur:

a) Decreasing cost per bit;
b) Increasing capacity;
c) Increasing access time;
d) Decreasing frequency of access of the memory by the processor.

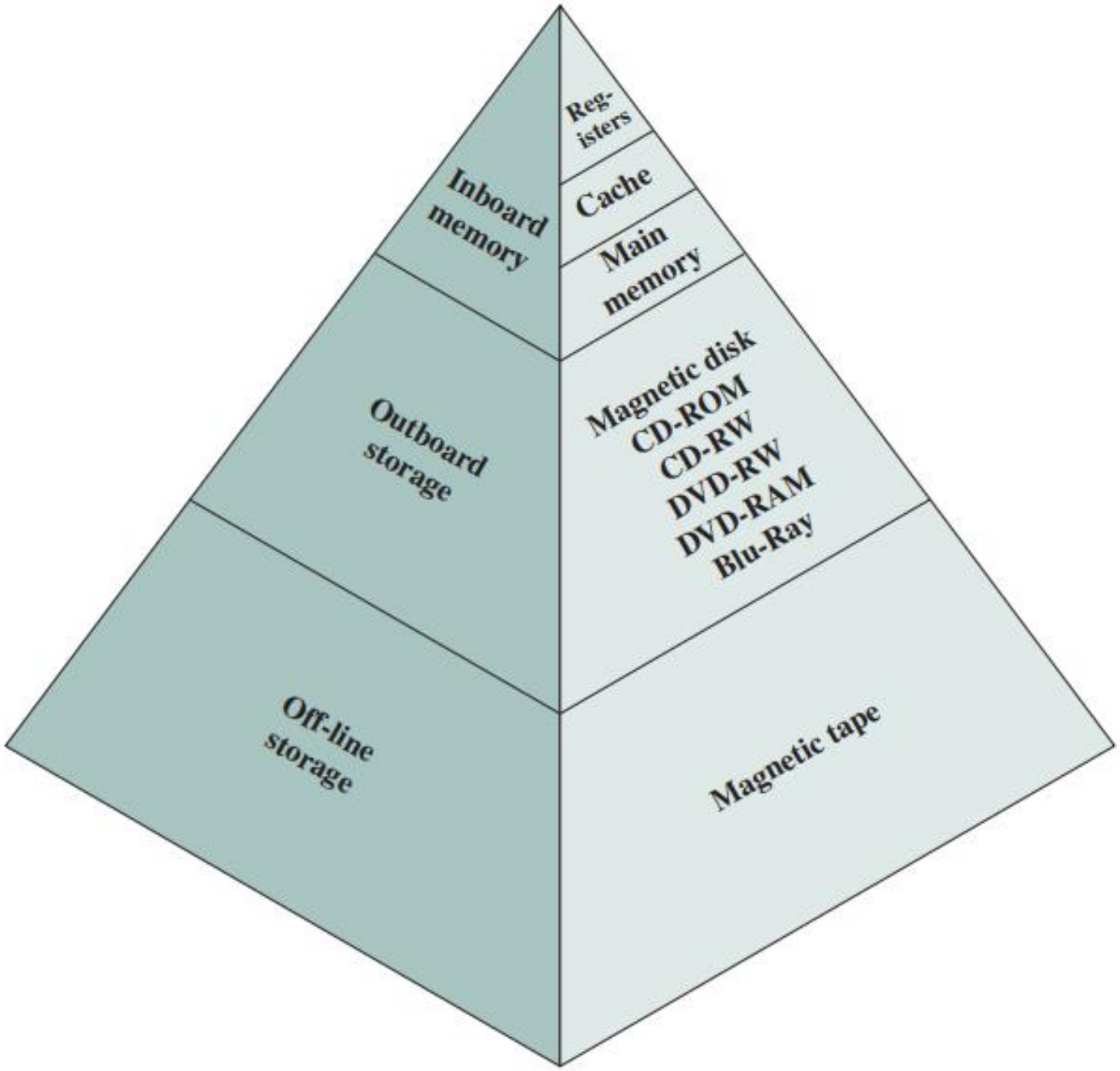

CACHE MEMORY

- The data or contents of the main memory that are used frequently by CPU are stored in the cache memory so that the processor can easily access that data in a shorter time. Whenever the CPU needs to access memory, it first checks the cache memory. If the data is not found in cache memory, then the CPU moves into the main memory.
- Cache memory is placed between the CPU and the main memory. The block diagram for a cache memory can be represented as:

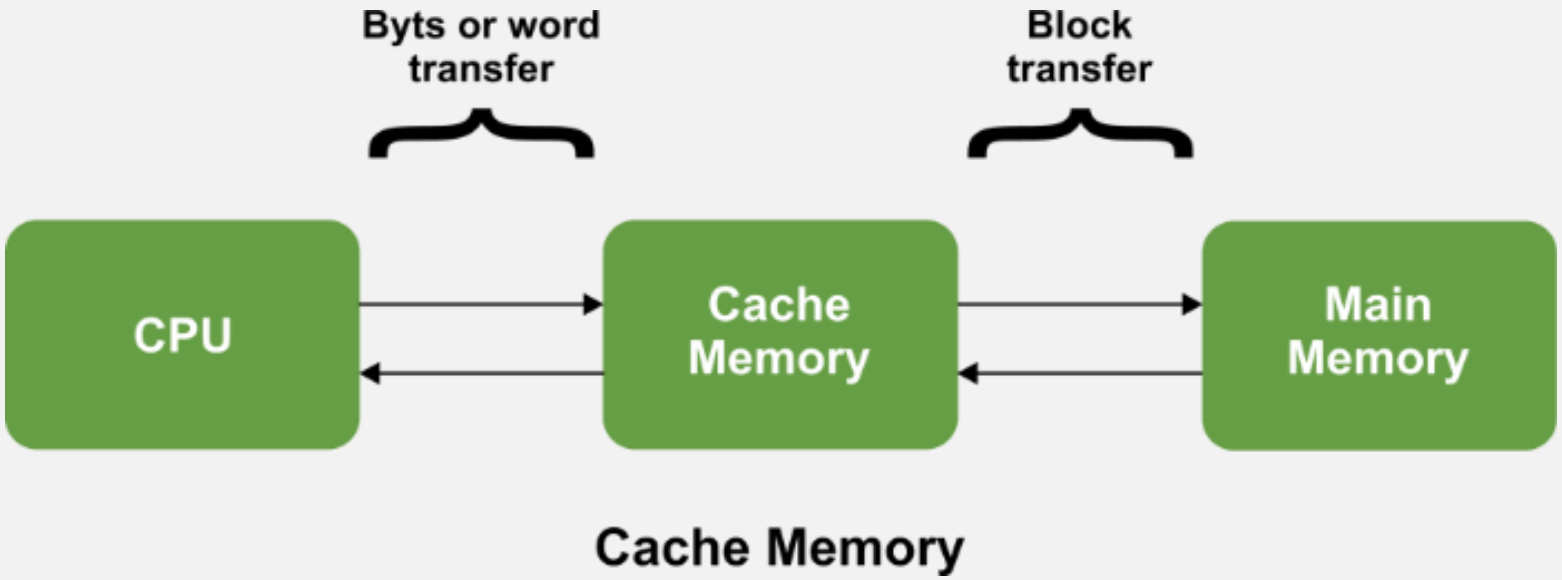

CACHE MEMORY

Figure-b depicts the use of multiple levels of cache. The L2 cache is slower and typically larger than the L1 cache, and the L3 cache is slower and typically larger than the L2 cache.

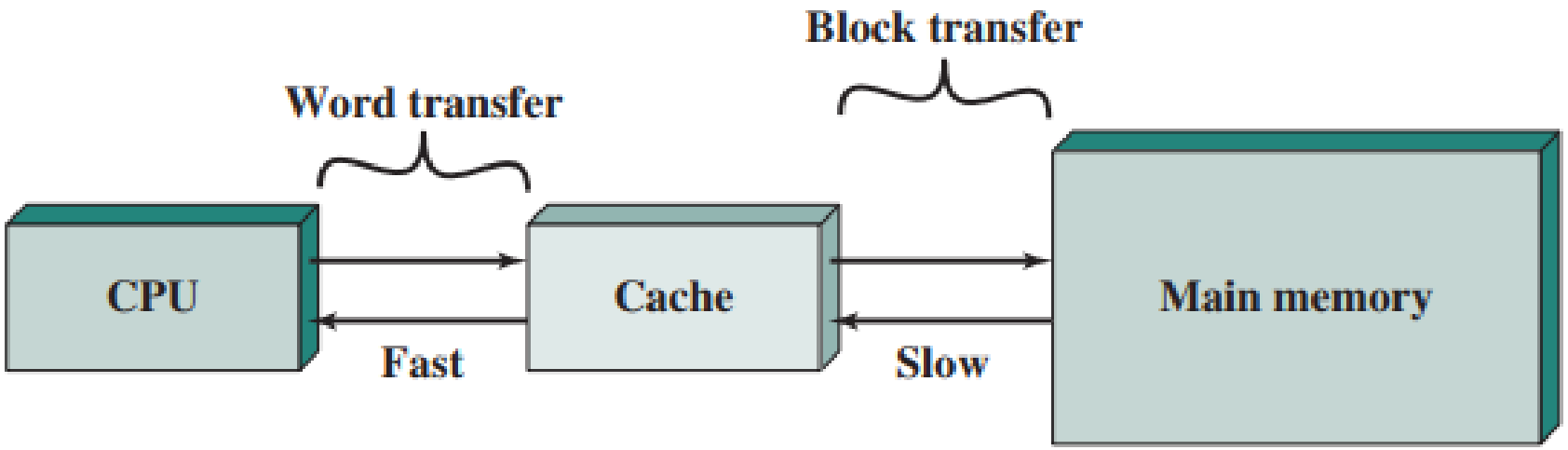

(a) Single cache

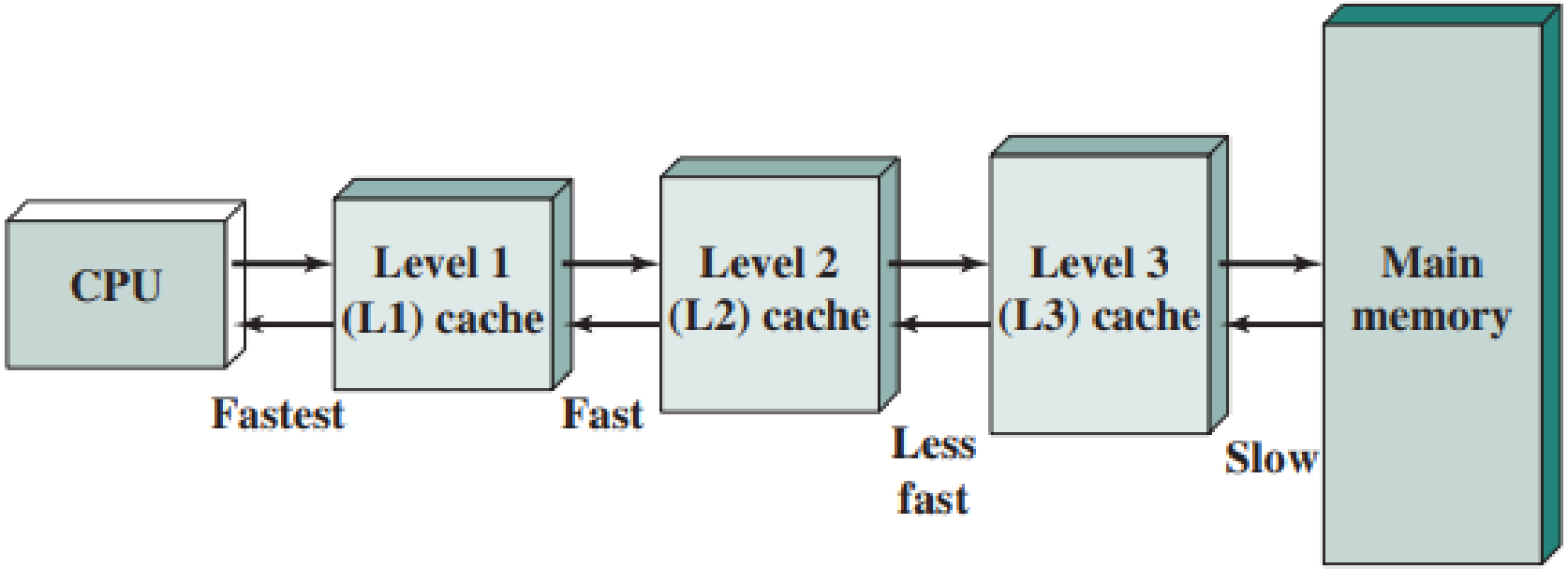

(b) Three-level cache organization

CACHE SIZES OF SOME PROCESSORS

Processor	Type	Year of Introduction	L1 Cache[a]	L2 Cache	L3 Cache
IBM 360/85	Mainframe	1968	16–32 kB	—	—
PDP-11/70	Minicomputer	1975	1 kB	—	—
VAX 11/780	Minicomputer	1978	16 kB	—	—
IBM 3033	Mainframe	1978	64 kB	—	—
IBM 3090	Mainframe	1985	128–256 kB	—	—
Intel 80486	PC	1989	8 kB	—	—
Pentium	PC	1993	8 kB/8 kB	256–512 kB	—
PowerPC 601	PC	1993	32 kB	—	—
PowerPC 620	PC	1996	32 kB/32 kB	—	—
PowerPC G4	PC/server	1999	32 kB/32 kB	256 kB to 1 MB	2 MB
IBM S/390 G6	Mainframe	1999	256 kB	8 MB	—
Pentium 4	PC/server	2000	8 kB/8 kB	256 kB	—
IBM SP	High-end server/ supercomputer	2000	64 kB/32 kB	8 MB	—
CRAY MTA[b]	Supercomputer	2000	8 kB	2 MB	—
Itanium	PC/server	2001	16 kB/16 kB	96 kB	4 MB
Itanium 2	PC/server	2002	32 kB	256 kB	6 MB
IBM POWER5	High-end server	2003	64 kB	1.9 MB	36 MB
CRAY XD-1	Supercomputer	2004	64 kB/64 kB	1 MB	—
IBM POWER6	PC/server	2007	64 kB/64 kB	4 MB	32 MB
IBM z10	Mainframe	2008	64 kB/128 kB	3 MB	24–48 MB
Intel Core i7 EE 990	Workstation/ server	2011	6 × 32 kB/ 32 kB	1.5 MB	12 MB
IBM zEnterprise 196	Mainframe/ server	2011	24 × 64 kB/ 128 kB	24 × 1.5 MB	24 MB L3 192 MB L4

Figure depicts the structure of a cache/main-memory system. Main memory consists of up to 2^n addressable words, with each word having a unique n- bit address. For mapping purposes, this memory is considered to consist of a number of fixed-length blocks of K words each. That is, there are $M = \frac{2^n}{K}$ blocks in main memory. The cache consists of m blocks, called lines. Each line contains K words.

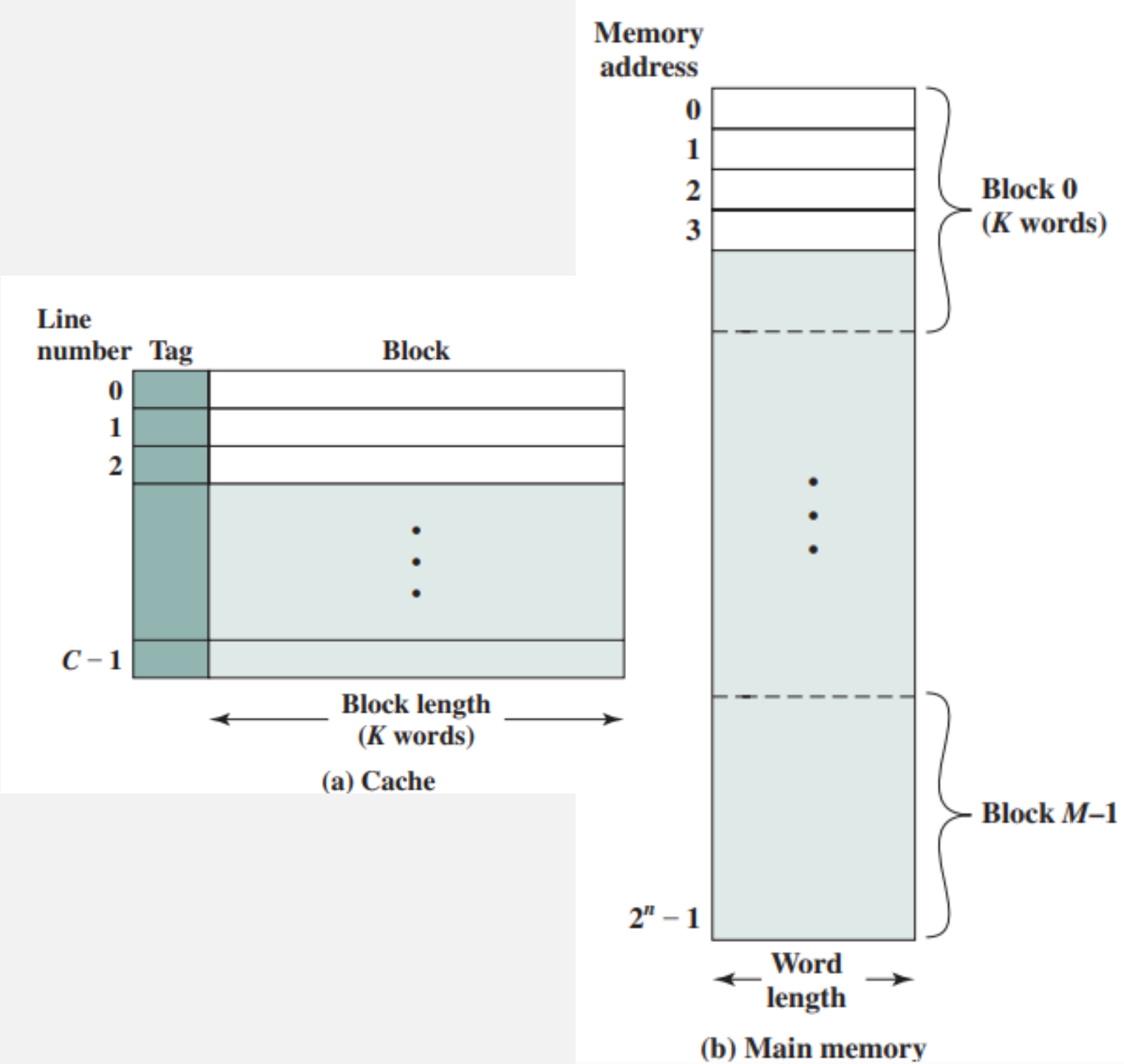

CACHE READ OPERATION

Last two operations occurring in parallel and reflects the organization , which is typical of contemporary cache organizations.

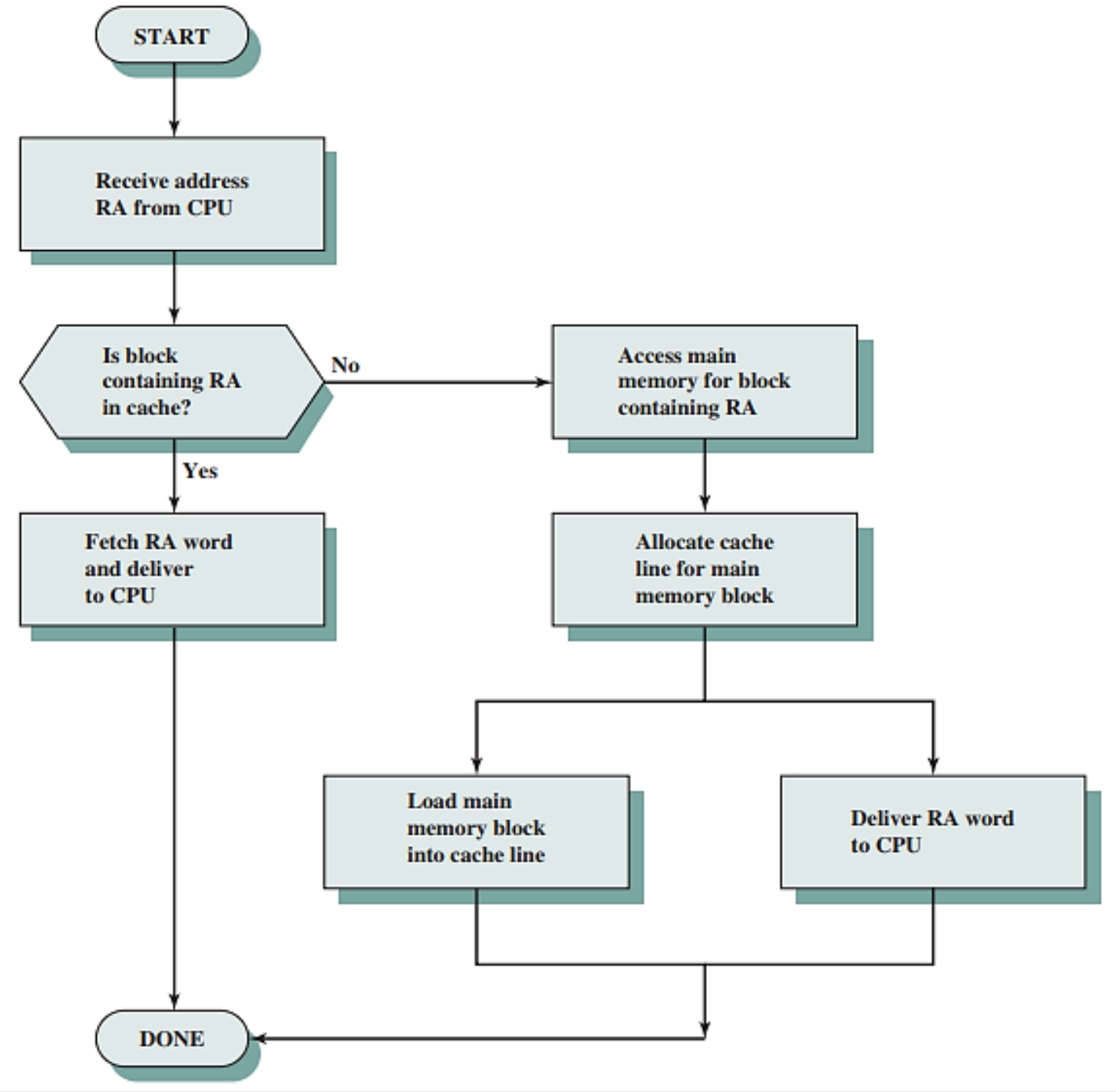

CACHE ORGANIZATION

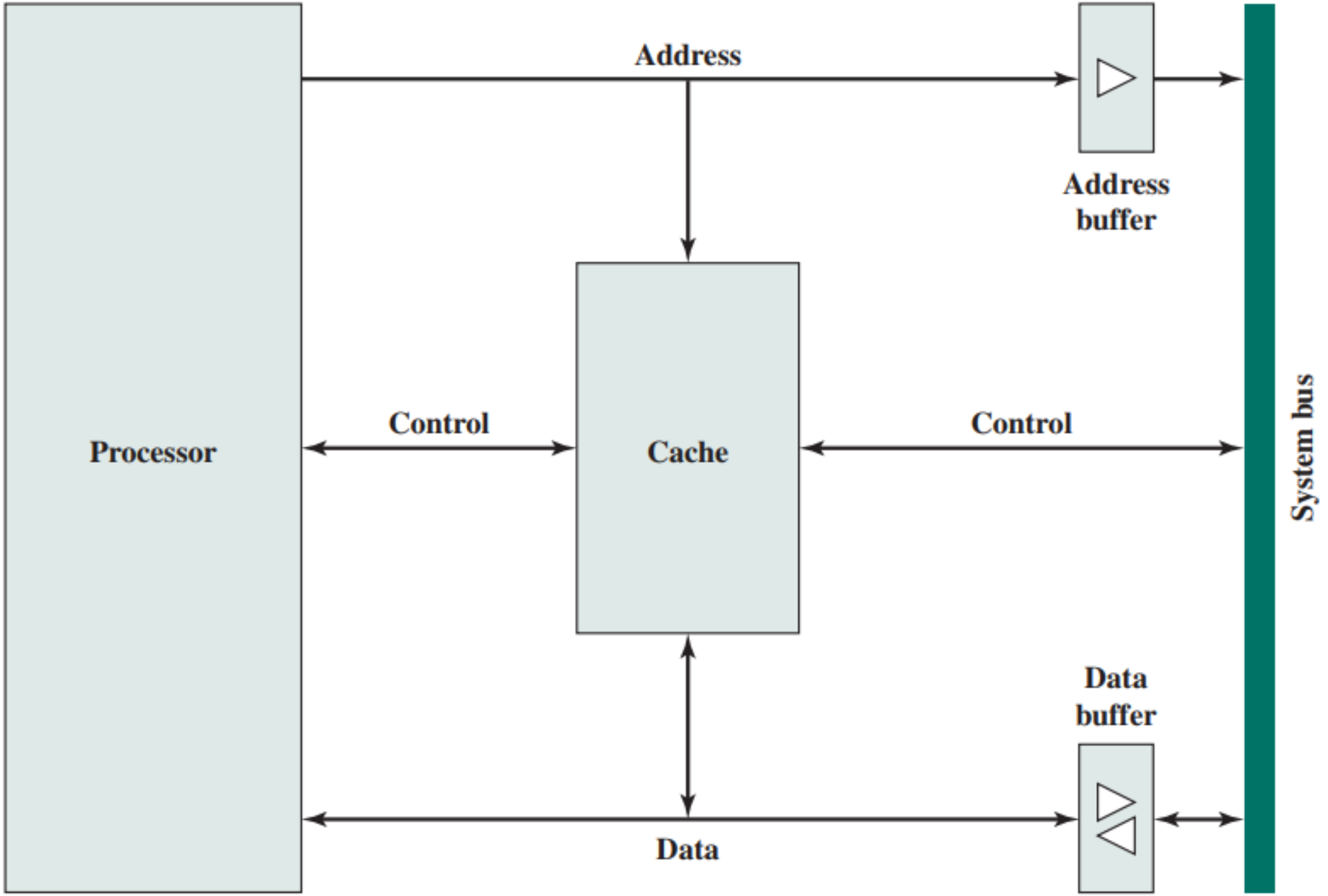

LOGICAL CACHE

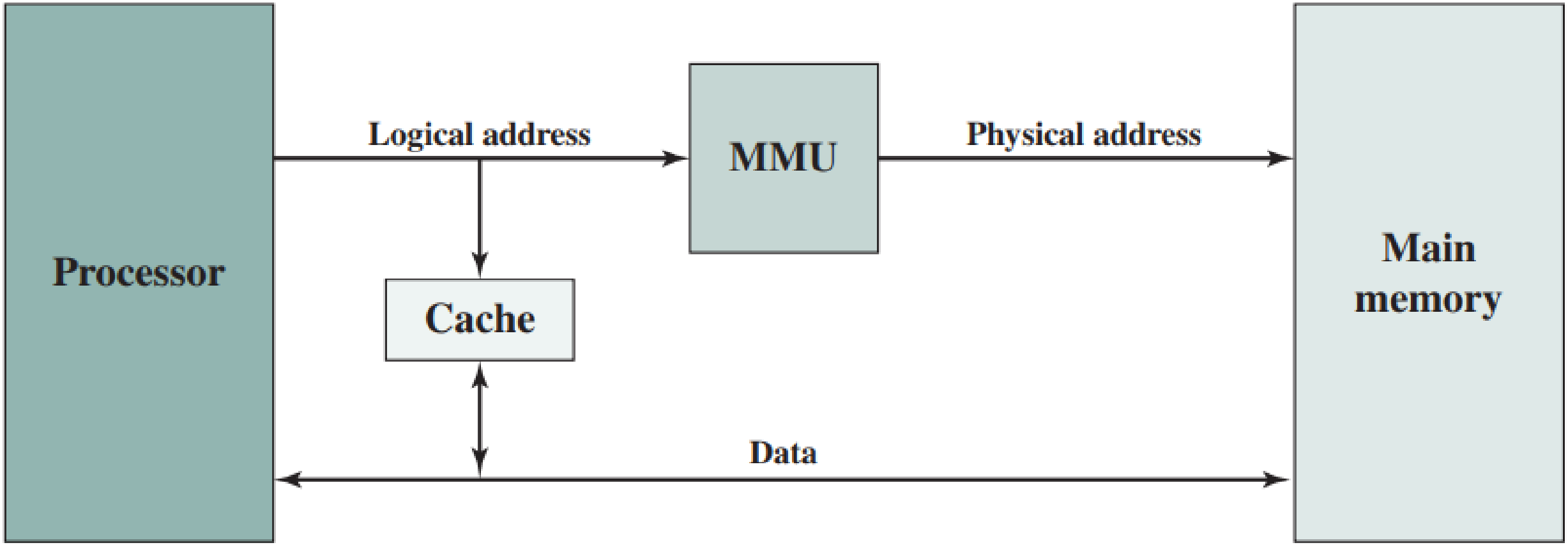

(a) Logical cache

PHYSICAL CACHE

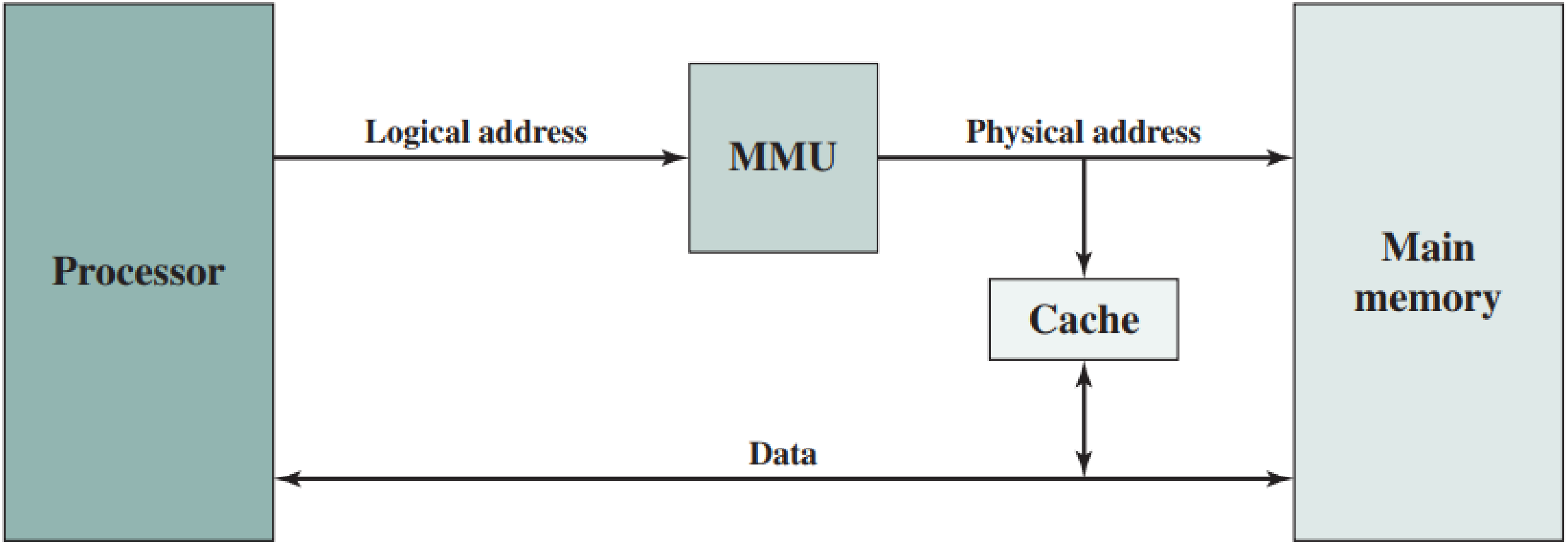

(b) Physical cache

SEMICONDUCTOR MEMORY

SEMICONDUCTOR MEMORY

- The basic element of a semiconductor memory is the memory cell. Although a variety of electronic technologies are used, all semiconductor memory cells share certain properties:
  - They exhibit two stable (or semistable) states, which can be used to represent binary 1 and 0.
  - They are capable of being written into (at least once), to set the state.
  - They are capable of being read to sense the state.

SEMICONDUCTOR MEMORY

Figure depicts the operation of a memory cell. Most commonly, the cell has three functional terminals capable of carrying an electrical signal. The select terminal, as the name suggests, selects a memory cell for a read or write operation. The control terminal indicates read or write. For writing, the other terminal provides an electrical signal that sets the state of the cell to 1 or 0. For reading, that terminal is used for output of the cell's state.

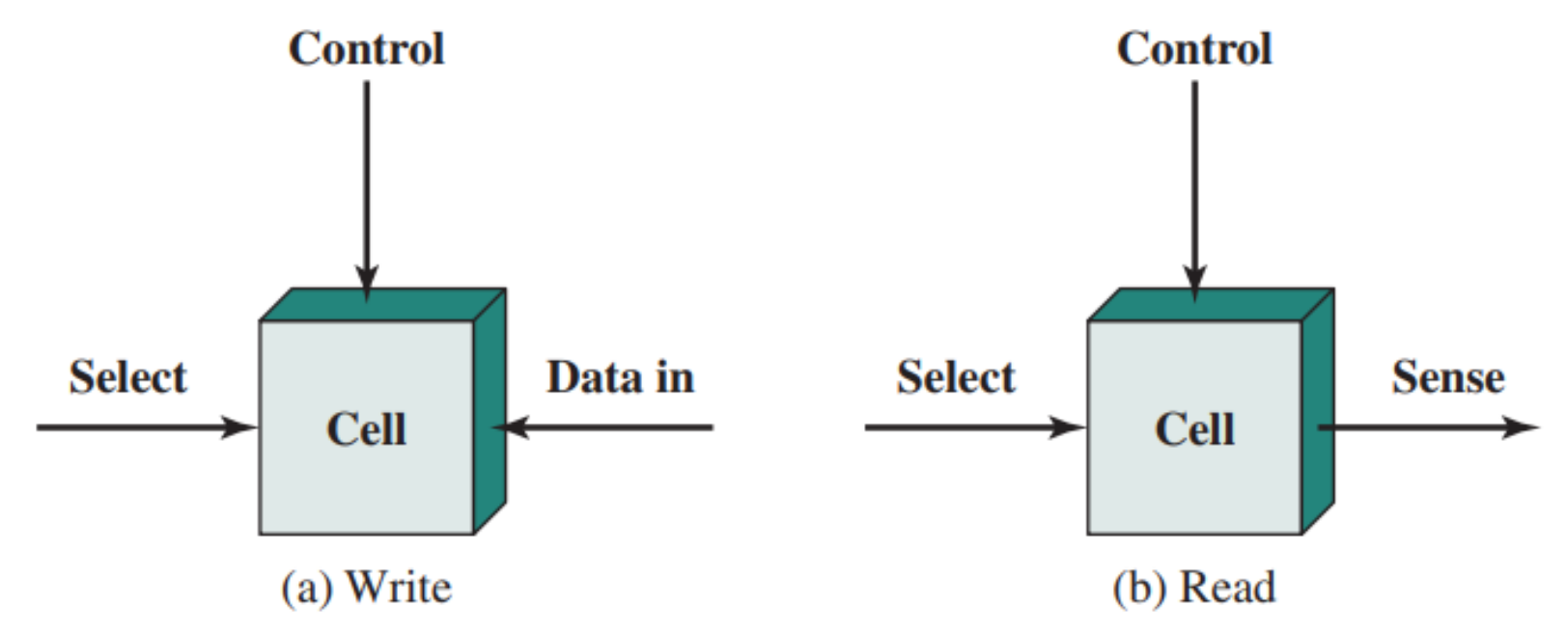

SEMICONDUCTOR MEMORY TYPES

Memory Type	Category	Erasure	Write Mechanism	Volatility
Random-access memory (RAM)	Read-write memory	Electrically, byte-level	Electrically	Volatile
Read-only memory (ROM)	Read-only memory	Not possible	Masks	Nonvolatile
Programmable ROM (PROM)			Electrically	
Erasable PROM (EPROM)	Read-mostly memory	UV light, chip-level		
Electrically Erasable PROM (EEPROM)		Electrically, byte-level		
Flash memory		Electrically, block-level		

DRAM-SRAM

Dynamic Ram RAM technology is divided into two technologies: dynamic and static. A dynamic RAM (DRAM) is made with cells that store data as charge on capacitors. The presence or absence of charge in a capacitor is interpreted as a binary 1 or 0. Because capacitors have a natural tendency to discharge, dynamic RAMs require periodic charge refreshing to maintain data storage. The term dynamic refers to this tendency of the stored charge to leak away, even with power continuously applied.

Static Ram In contrast, a static RAM (SRAM) is a digital device that uses the same logic elements used in the processor. In a SRAM, binary values are stored using traditional flip-flop logic-gate configurations (see Chapter 11 for a description of flip-flops). A static RAM will hold its data as long as power is supplied to it.

SRAM VS DRAM

Both volatile

- Power must be continuously supplied to the memory to preserve the bit values

Dynamic cell

- Simpler to build, smaller
- More dense (smaller cells = more cells per unit area)
- Less expensive
- Requires the supporting refresh circuitry
- Tend to be favored for large memory requirements
- Used for n memory

Static

- Faster
- Used for cache memory (both on and off chip)

DRAM-SRAM

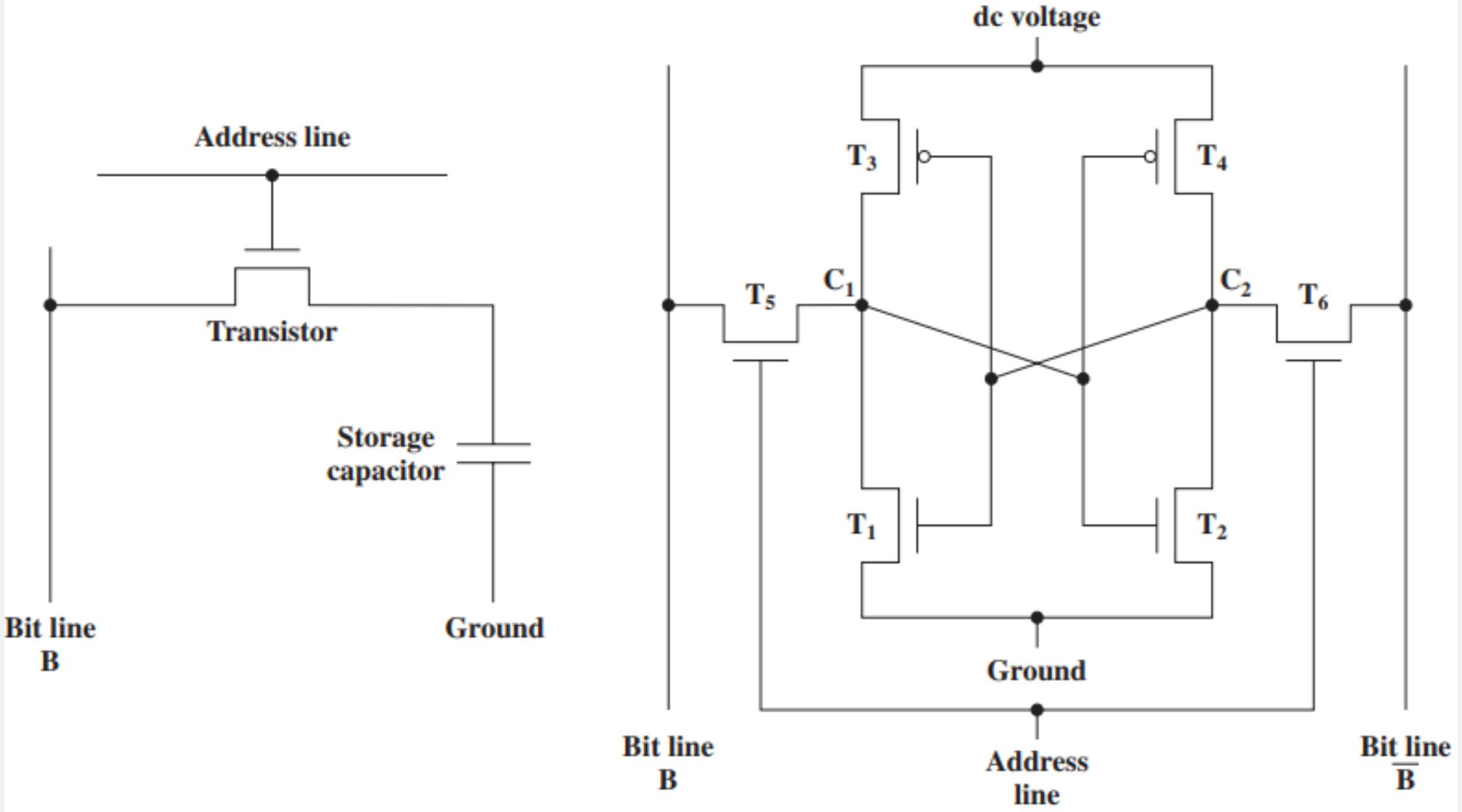

(a) Dynamic RAM (DRAM) cell

(b) Static RAM (SRAM) cell

READ-MOSTLY MEMORY

EPROM

- Erasable programmable read-only memory
- Erasure process can be performed repeatedly
- More expensive than PROM but it has the advantage of the multiple update capability

EEPROM

- Electrically erasable programmable read-only memory
- Can be written into at any time without erasing prior contents
- Combines the advantage of non-volatility with the flexibility of being updatable in place
- More expensive than EPROM

Flash Memory

- Intermediate between EPROM and EEPROM in both cost and functionality
- Uses an electrical erasing technology, does not provide byte-level erasure
- Microchip is organized so that a section of memory cells are erased in a single action or “flash”

INTERNAL STRUCTURE OF ROM

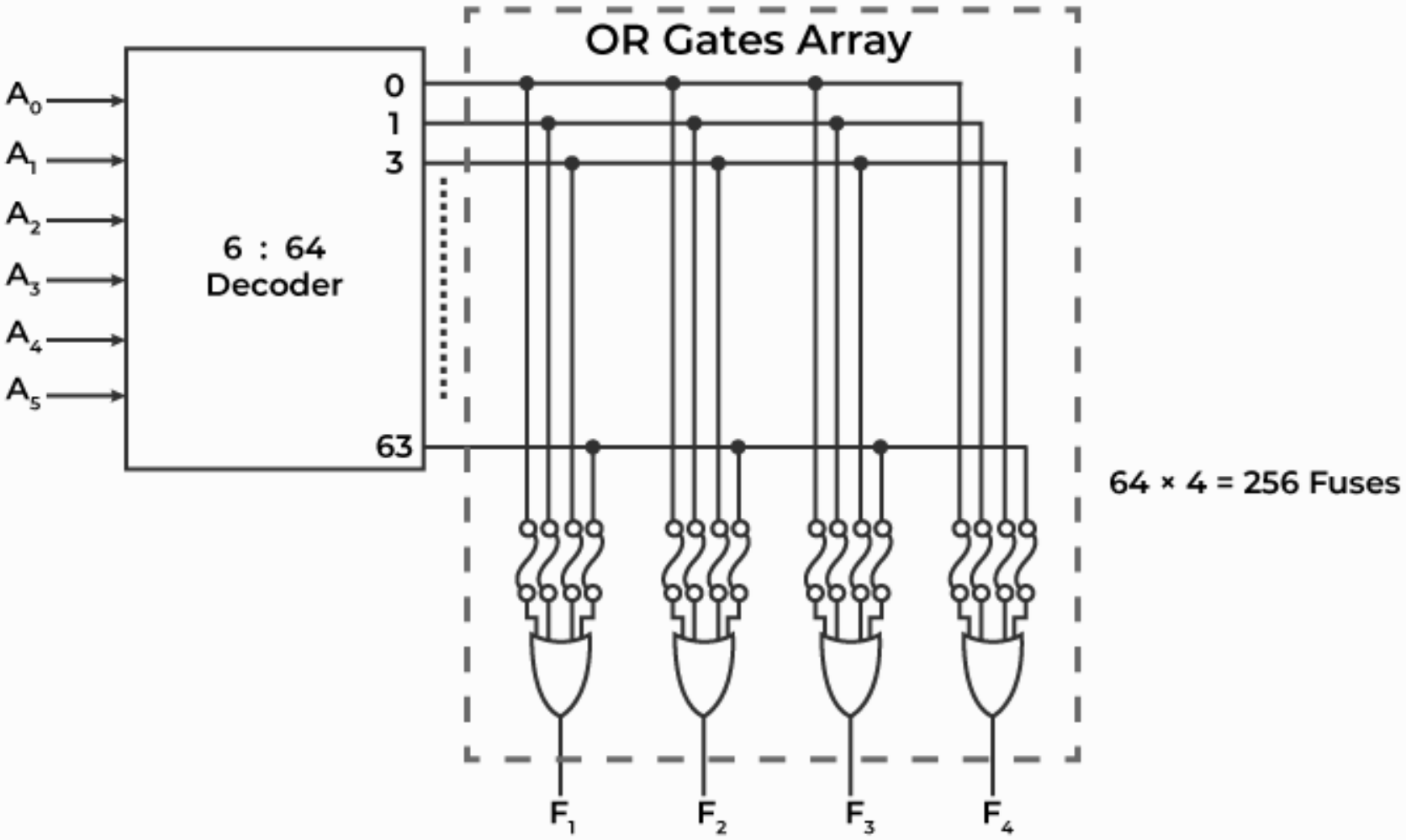

Internal Construction of 64×4 ROM

At first to select a row from a lot of line we need a MUX, and after row is selected the column decoder works to pinpoint the exact bit within that row. So, column doesn't need MUX

All DRAMs require a refresh operation.

Typical 16-Mbit DRAM (4M * 4)

4 bits are read or written at a time.

11 address lines are needed to select one of 2048 rows. $\log_2 2048=11$

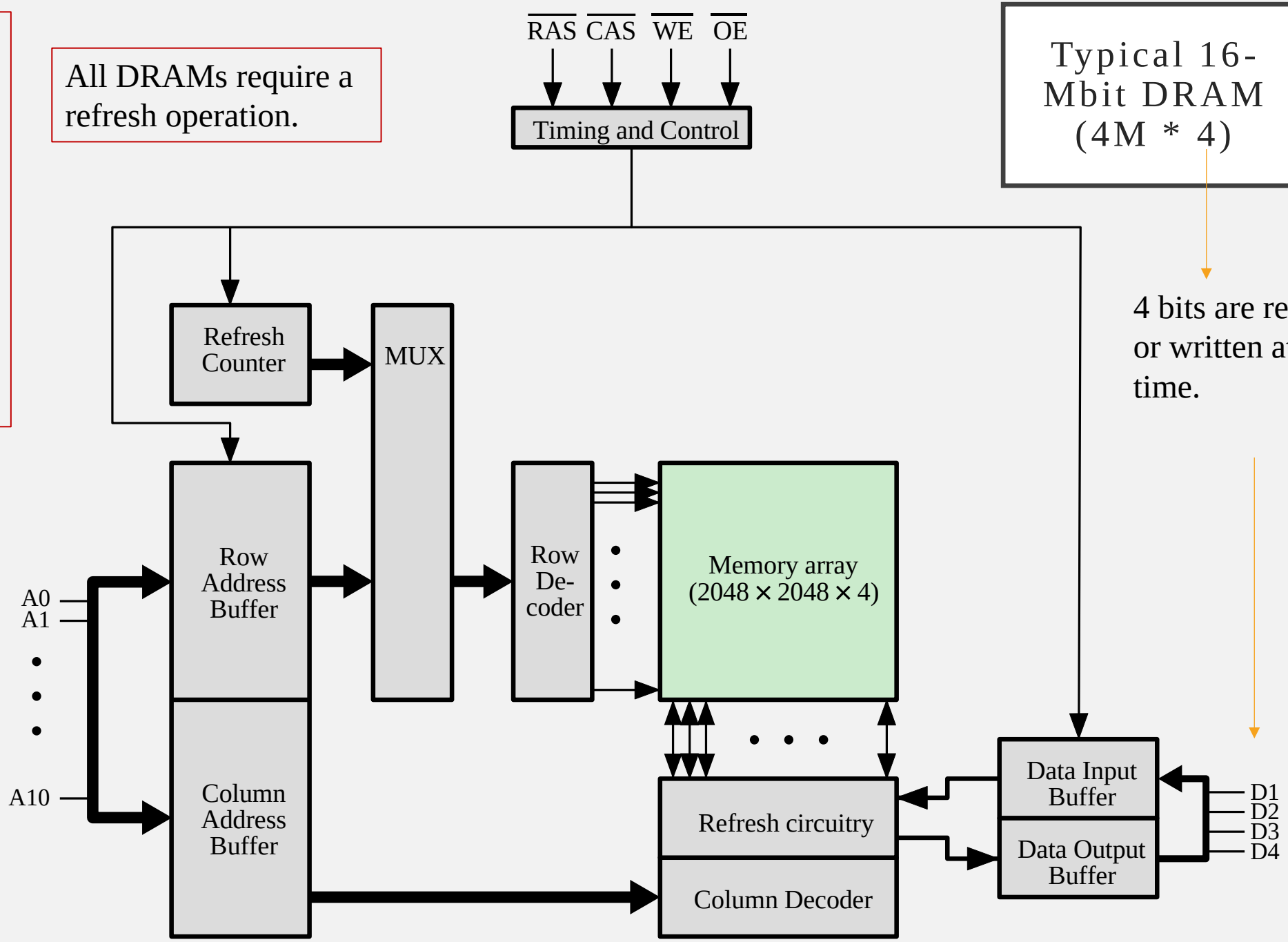

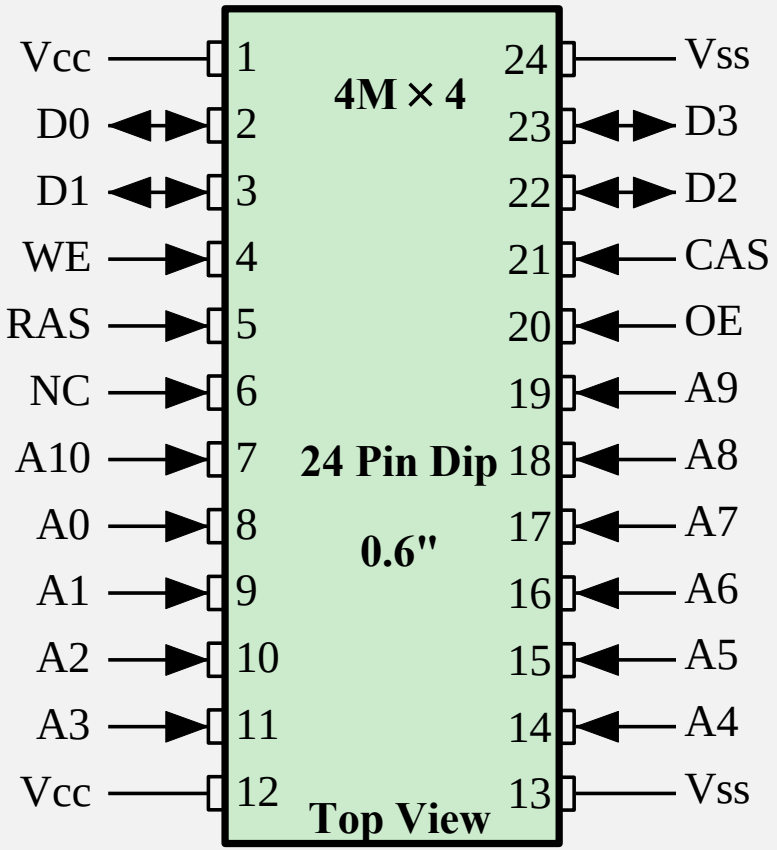

Write Enable (WE) - write
Output Enable (OE) -read
Row Address Select (RAS)
Column Address Select (CAS)
No Connect (NC)

(b) 16 Mbit DRAM

Figure: Typical Memory Package Pins and Signals

Simplified DRAM Read Timing

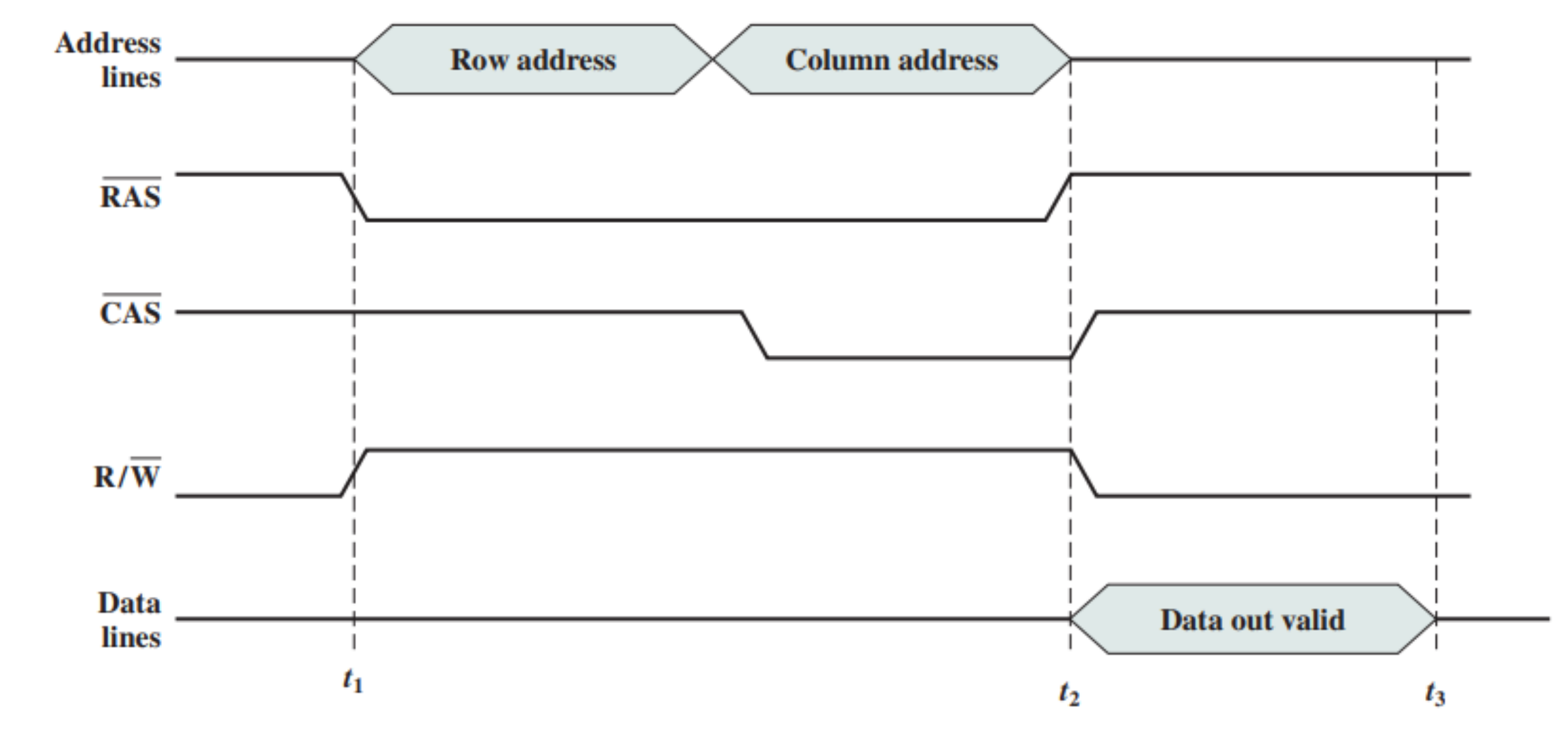

ASYNCHRONOUS DRAM OPERATION

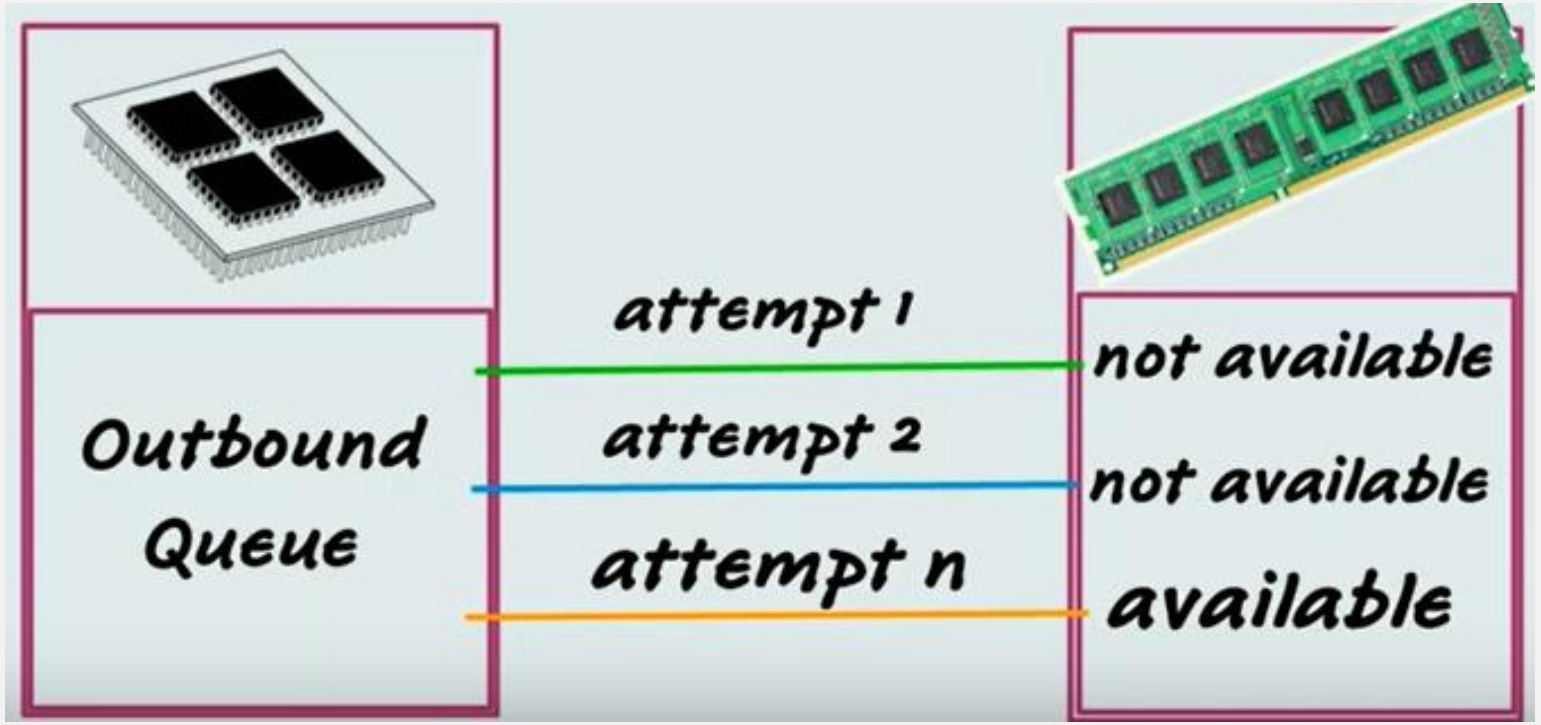

The CPU experiences delays in data transfer speed due to waiting for memory availability.

ADVANCED DRAM ORGANIZATION

One of the most critical system bottlenecks when using high-performance processors is the interface to main internal memory.

- The traditional DRAM chip is constrained both by its internal architecture and by its interface to the processor's memory bus.
- A number of enhancements to the basic DRAM architecture have been explored.
- The schemes that currently dominate the market are SDRAM and DDR-DRAM.

SYNCHRONOUS DRAM (SDRAM)

One of the most widely used forms of DRAM

Exchanges data with the processor synchronized to an external clock signal and running at the full speed of the processor/memory bus without imposing wait states.

With synchronous access the DRAM moves data in and out under control of the system clock

The processor or other master issues the instruction and address information which is latched by the DRAM

The DRAM then responds after a set number of clock cycles

Meanwhile the master can safely do other tasks while the SDRAM is processing

SDR SDRAM (SDRAM)

In case of synchronous DRAM, data is transfer only for positive half cycle. That's why it is called single data rate SDRAM.

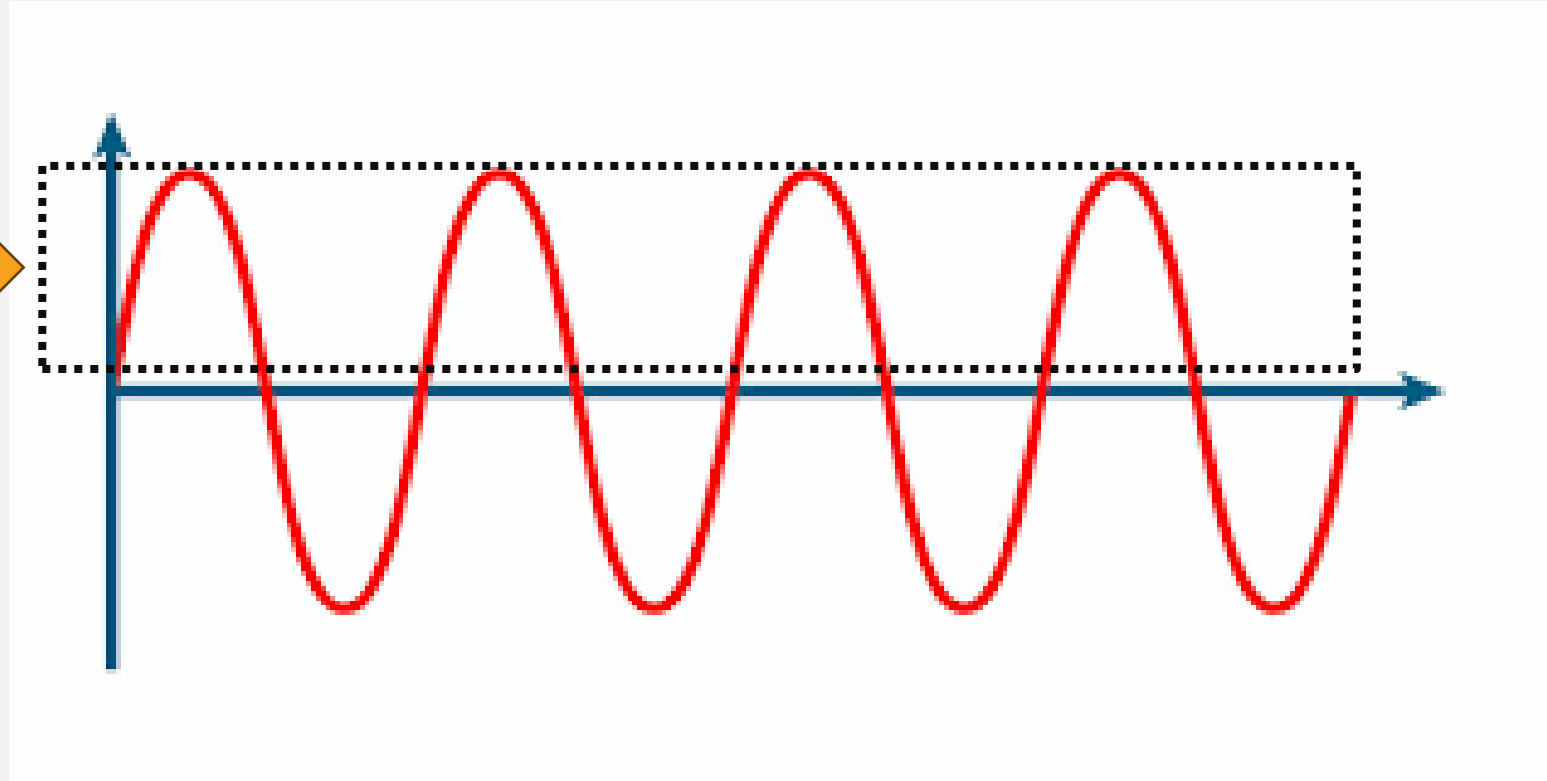

SDR SDRAM (SDRAM)

To achieve more speed both clock cycle is utilized in DDR SDRAM.
DDR- Double Data Rate

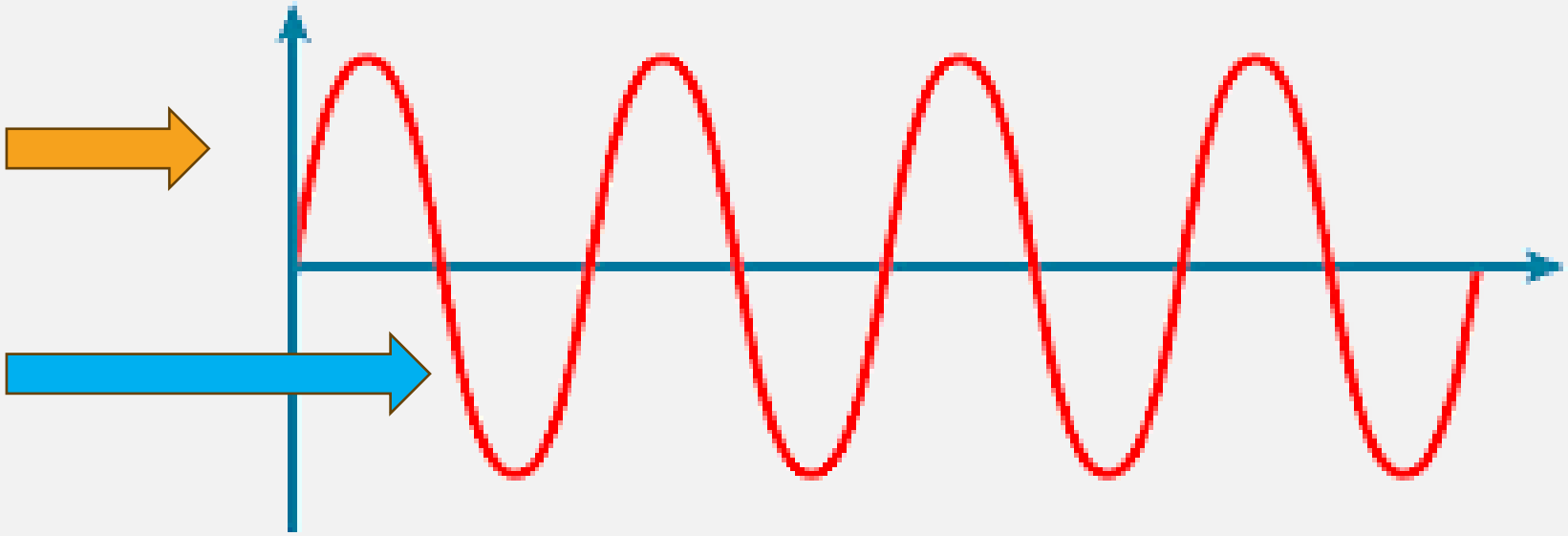

DDR SDRAM

Double Data Rate SDRAM (DDR SDRAM)

Developed by the JEDEC Solid State Technology Association (Electronic Industries Alliance's semiconductor-engineering standardization body)
Numerous companies make DDR chips, which are widely used in desktop computers and servers.

DDR achieves higher data rates in three ways:

- First, the data transfer is synchronized to both the rising and falling edge of the clock, rather than just the rising edge.
- Second, DDR uses higher clock rate on the bus to increase the transfer rate.
- Third, a buffering scheme is used.

DDR SDRAM

	DDR1	DDR2	DDR3	DDR4
Prefetch buffer (bits)	2	4	8	8
Voltage level (V)	2.5	1.8	1.5	1.2
Front side bus data rates (Mbps)	200—400	400—1066	800—2133	2133—4266

Faster

Each generation brings increased data transfer rates, reduced power consumption, and improved performance over the previous one.

FLASH MEMORY

- Used both for internal memory and external memory applications
- First introduced in the mid-1980's
- Is intermediate between EPROM and EEPROM in both cost and functionality
- Uses an electrical erasing technology like EEPROM
- It is possible to erase just blocks of memory rather than an entire chip
- Gets its name because the microchip is organized so that a section of memory cells are erased in a single action
- Does not provide byte-level erasure
- Uses only one transistor per bit so it achieves the high density of EPROM

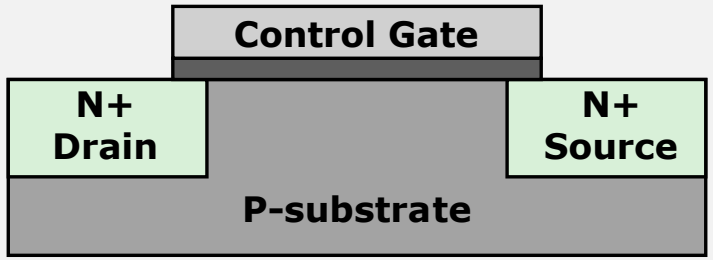

The properties of semiconductors so that a small voltage applied to the gate can be used to control the flow of a large current between the source and the drain.

(a) Transistor structure

A second gate—called a floating gate, because it is insulated by a thin oxide layer—is added to the transistor.

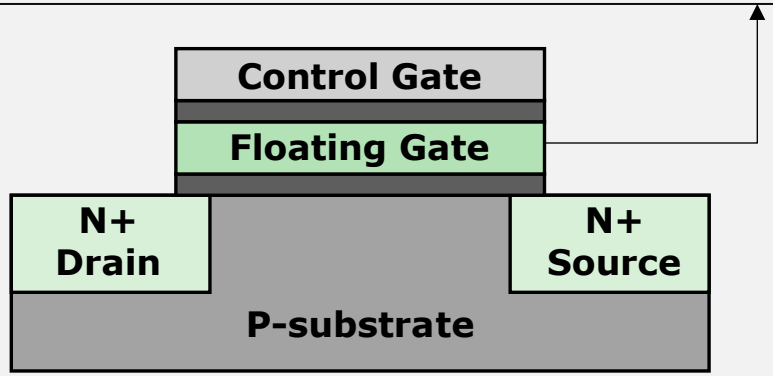

(b) Flash memory cell in one state

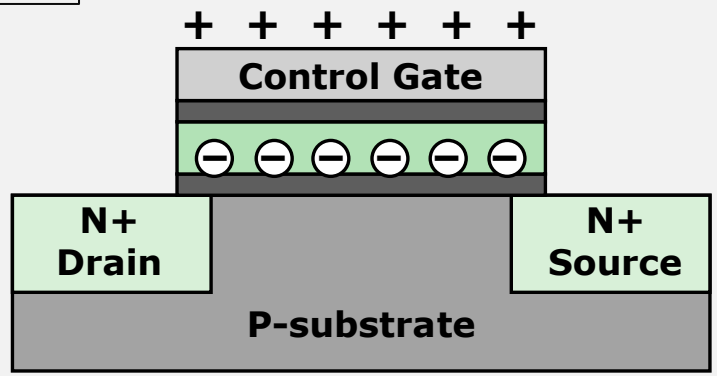

(c) Flash memory cell in zero state

Flash Memory Operation

- In a flash memory cell, a second gate—called a floating gate, because it is insulated by a thin oxide layer—is added to the transistor.
- Initially, the floating gate does not interfere with the operation of the transistor Figure b, in this state, the cell is deemed to represent binary 1. Applying a large voltage across the oxide layer causes electrons to tunnel through it and become trapped on the floating gate, where they remain even if the power is disconnected.
- Figure c, in this state, the cell is deemed to represent binary 0. The state of the cell can be read by using external circuitry to test whether the transistor is working or not. Applying a large voltage in the opposite direction removes the electrons from the floating gate, returning to a state of binary 1.
- An important characteristic of flash memory is that it is persistent memory, which means that it retains data when there is no power applied to the memory. Thus, it is useful for secondary (external) storage, and as an alternative to random access memory in computers.

- There are two distinctive types of flash memory, designated as NOR and NAND.
- In **NOR** flash memory, the basic unit of access is a bit, referred to as a memory cell. Cells in NOR flash are connected in parallel to the bit lines so that each cell can be read/write/erased individually. If any memory cell of the device is turned on by the corresponding word line, the bit line goes low. This is similar in function to a NOR logic gate.

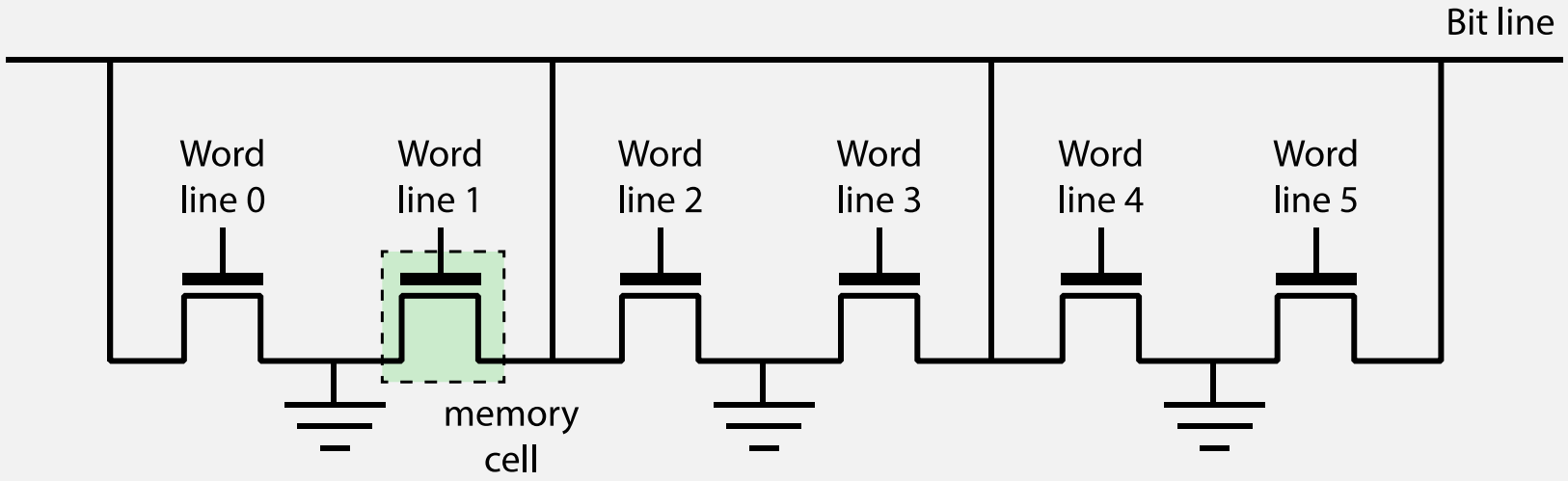

(a) NOR flash structure

NAND FLASH

- NAND flash memory is organized in transistor arrays with 16 or 32 transistors in series. The bit line goes low only if all the transistors in the corresponding word lines are turned on. This is similar in function to a NAND logic gate.

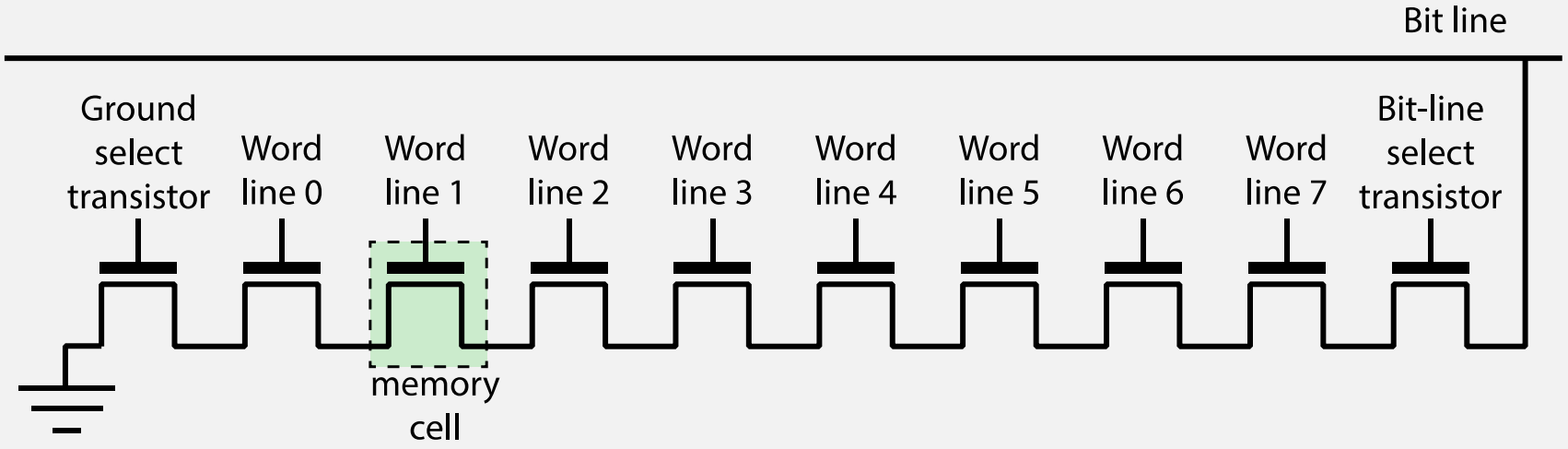

(b) NAND flash structure

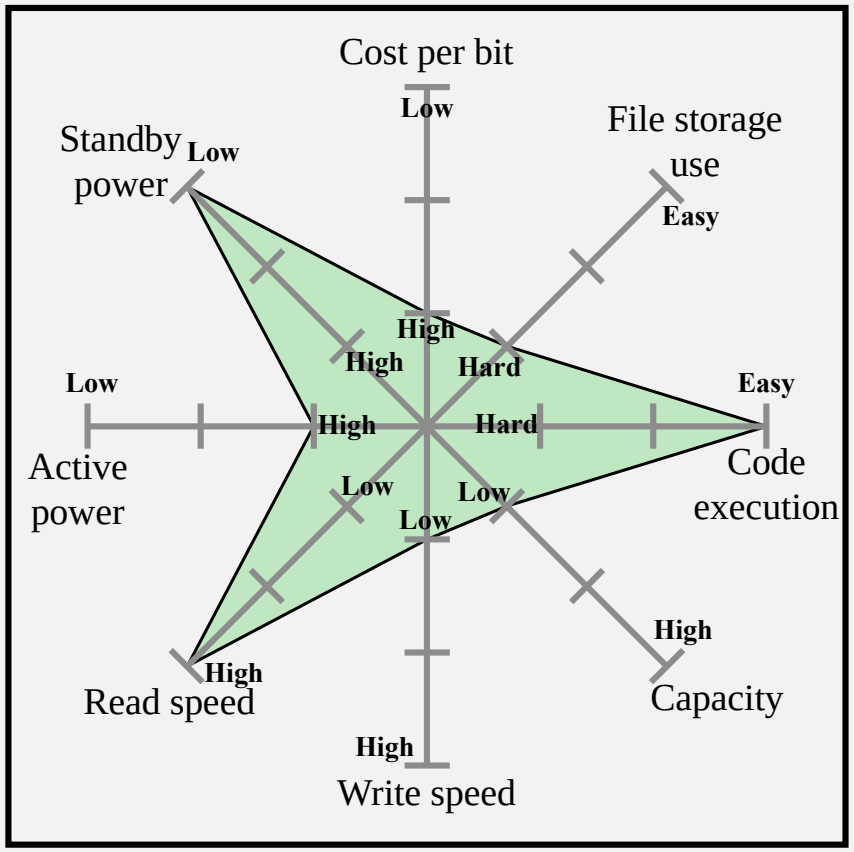

(a) NOR

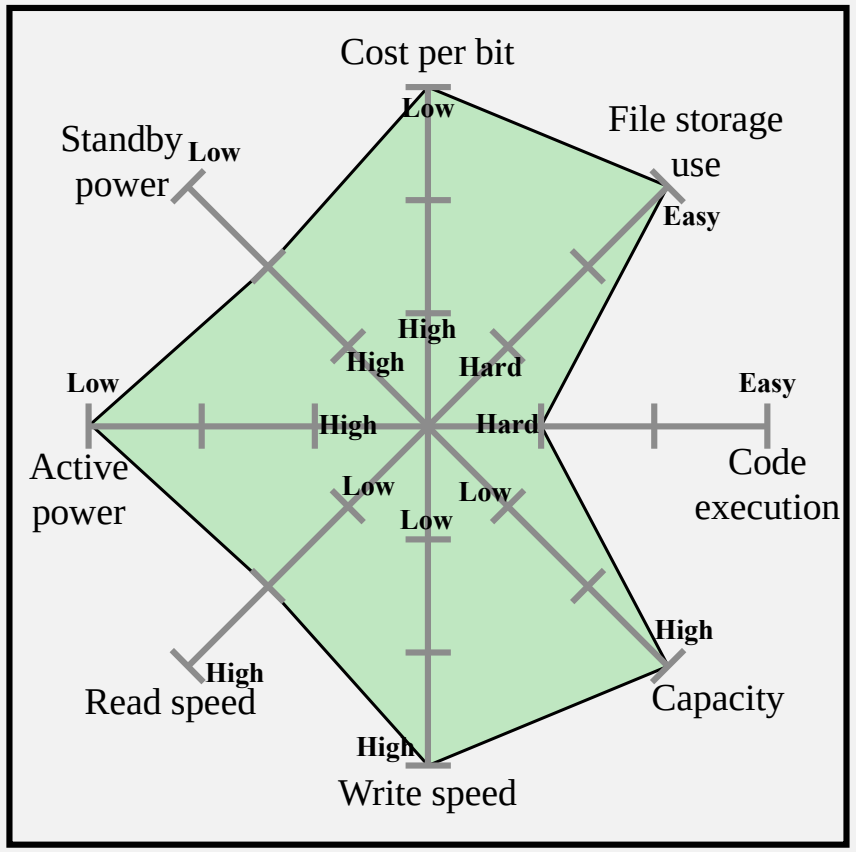

(b) NAND

Kiviat Graphs for Flash Memory

Nonvolatile RAM within the Memory Hierarchy

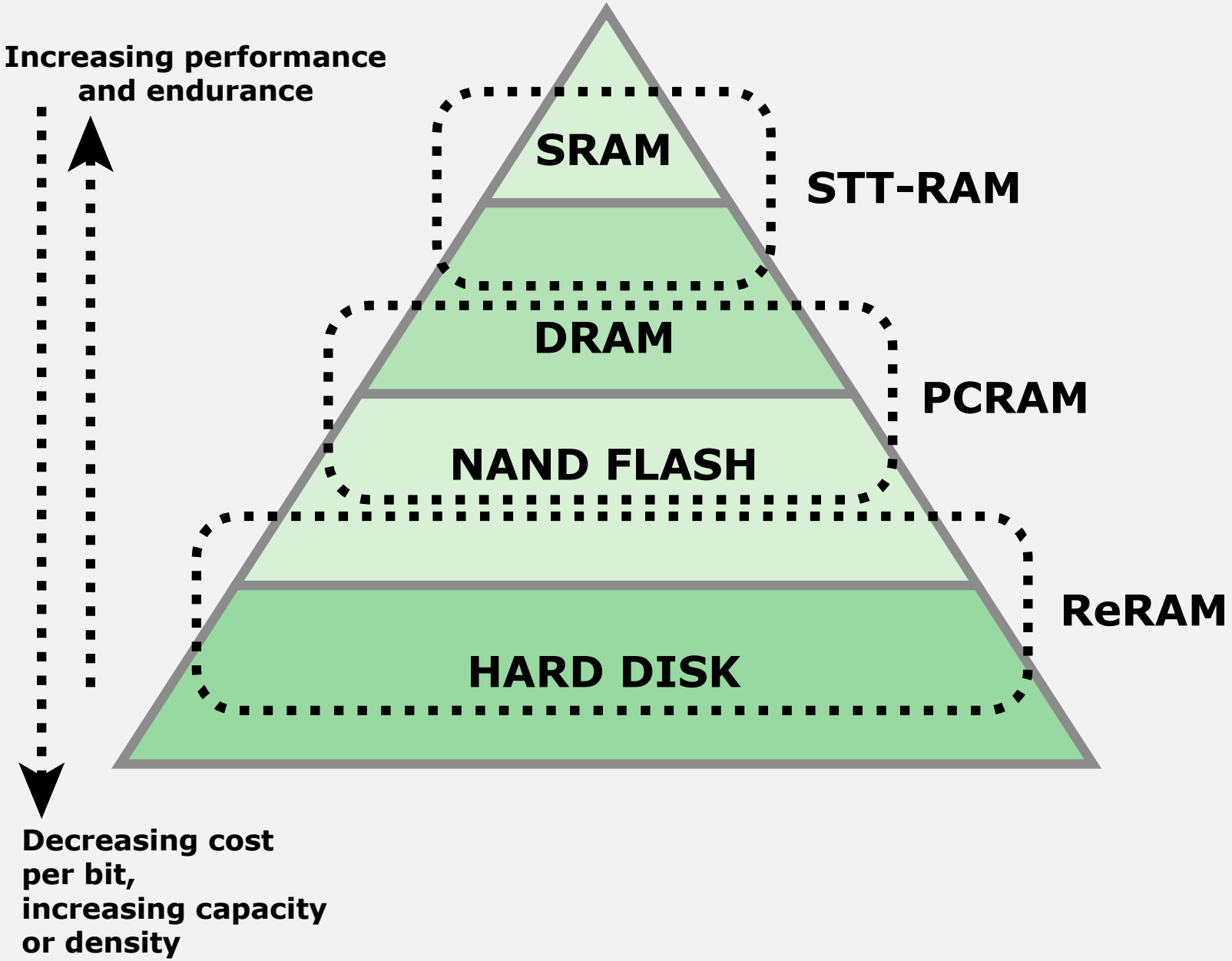

MAGNETIC MEMORY DEVICE

Magnetic storage or magnetic recording is the storage of data on a magnetized medium. Magnetic storage uses different patterns of magnetization in a magnetizable material to store data and is a form of non-volatile memory. The information is accessed using one or more read/write heads.

TYPES OF MAGNETIC MEMORY DEVICES

1. **Hard Disk Drives (HDDs)**: HDDs are the most common type of magnetic memory device used in computers and other digital devices. They store data on spinning magnetic disks coated with a ferromagnetic material. Data is written and read using magnetic heads that move across the disk's surface.

2. **Magnetic Tape**: Magnetic tape is a sequential storage medium that consists of a long strip of plastic coated with a magnetizable recording material. It's commonly used for backup and archival purposes due to its high capacity and relatively low cost per gigabyte.

3. **Magnetic Random-Access Memory (MRAM)**: MRAM is a type of non-volatile memory that uses magnetic fields to store data. It combines the advantages of both conventional RAM (fast read/write speeds) and flash memory (non-volatility).

ADVANTAGES

1. High capacity storage.
2. Relatively low cost per gigabyte.
3. Longevity and durability.
4. Non-volatility (data retention without power).
5. Compatibility with existing hardware and software infrastructure.

DISADVANTAGES

1. Slower access times compared to solid-state storage.
2. Susceptibility to data loss from magnetic interference or physical damage.
3. Mechanical components in some devices (e.g., HDDs) can lead to wear and eventual failure.
4. Power consumption, particularly in devices like HDDs that require spinning disks and moving parts.

OPTICAL MEMORY

An optical memory device is a type of data storage medium that utilizes light to read and write data. It differs from traditional magnetic storage devices, like hard drives, and semiconductor-based devices, like flash memory, in that it uses light, typically laser beams, to access and store data.

TYPES OF OPTICAL MEMORY DEVICES

1. **Compact Disc (CD)**: CDs use a laser to read and write data stored on a reflective surface. They were popular for music, software, and data storage in the late 20th century.
2. **Digital Versatile Disc (DVD)**: DVDs are similar to CDs but can store much more data due to their higher density. They are commonly used for movies, software distribution, and data backup.
3. **Blu-ray Disc**: Blu-ray discs are a newer optical storage format that can store even more data than DVDs, primarily used for high-definition video playback and data storage.
4. **Optical Disc Drives**: These are the drives used to read and write data to optical discs. They contain a laser assembly that reads and writes data by altering the reflectivity of the disc's surface.
5. **Optical Tape**: Optical tape is a type of data storage medium that uses a tape-like structure coated with a light-sensitive material. It offers high storage capacities and is often used for long-term archival storage.
6. **Holographic Memory**: This is an experimental form of optical memory that uses holographic techniques to store and retrieve data. It has the potential for extremely high storage densities but has not yet been widely adopted.

ADVANTAGES

1. High data density
2. Non-volatile storage
3. Relatively low cost
4. Resistance to magnetic fields
5. Portability
6. Compatibility with various devices
7. Longevity
8. Read-only versions

DISADVANTAGES

1. Slower access times compared to solid-state storage
2. Susceptibility to damage from scratches or exposure to light
3. Limited rewrite cycles for rewritable optical discs
4. Less suitable for high-speed data transfer compared to some solid-state storage devices
5. Compatibility issues with older or outdated hardware and software
6. Limited storage capacity compared to some newer storage technologies
7. Vulnerability to degradation over time, particularly for older discs
8. Dependency on optical disc drives, which may become obsolete in the future